P2 KERYO
WALL WASHER

Direct | Pendant

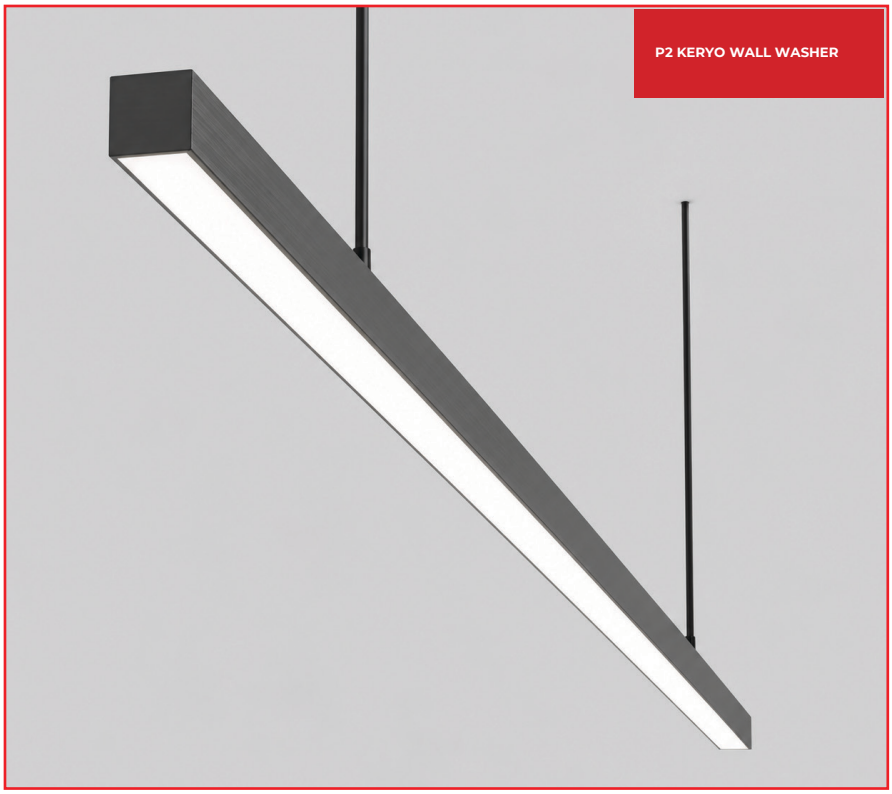

P2 KERYO WALL WASHER

INPUT 220-240 VAC | IP40 | CRI > 90

Quick Info

Mounting Type
Pendant

Material Colour
Customize RAL avilable

Protection mode
IP40

Driver Details
ON/OFF/, DALI-2 DT6 / DALI-2 DT8/ DALI +
Power Factor (PF) -0.95
THD- <10%
UGR - <19

LED
CCT- 3000K/ 4000K/ 5700K/ TUNABLE WHITE 2700K-6500K
CRI- ≥ 90
Life Span - L70@50000h
MacAdam - ≤3 SDCM

Beam Angle
Wall Washing Optics

Optics
Lens

Efficacy
80lm/W

P2 KERYO WALL WASHER is a linear grazer Luminaire with Extruded aluminium housing and with premium powder coating finish.

Powered by high quality LED's with a binning tolerance of ≤ 3 SDCM and CRI ≥ 90. The luminaire maintains atleast 70% of its luminous flux after 50,000 operating hours, guaranteeing long term reliability. High efficiency optics with narrow beam angle options of Wall washing vertically, reduces hot spots and gives uniform illumination.

With a standard size of 1200 mm length, 14.80mm width and 15mm height , this fixture is crafted for wall glazing making it ideal for professional applications.

Customisations in RAL finish, Wattages and Length available as per request to enhance installation and functionality.

Single Line Diagram

Pendant

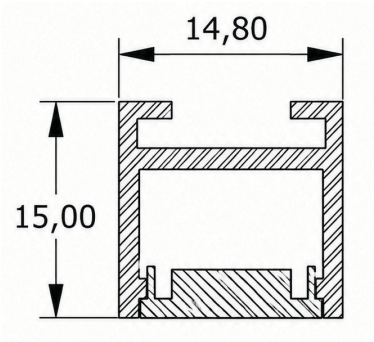

Electrical
Wattage - 28W
Opt Wattages Available -9W/ 21W/ 56W
Input Voltage- 220-240 VAC

Physical
Lenght- 1200mm
Height- 15mm
Width- 14.80 mm

divinity lights

Address: Plot No-A-89, RIICO Industrial Area, Karoli, Bhiwadi, Rajasthan 301019.

www.divinitylights.com